Portable Potty Seat

Online Dealer Resources: Get Quotes Instantly & Get Immediate Order Confirmations!
Please mark clearly with an **X** the items you wish to purchase.
Fax form to Special Tomato at (866) 901- 8707 or call in your order to our Pediatric Helpline at (866) 529-8407.

Account #: _____ Ship to: _____
Date: _____ Name: _____
PO #: _____ Address: _____
Buyer: _____ City: _____
Attention: _____ Phone: ( ) _____

Soft, Contoured Portable Potty Seat

The Portable Potty Seat comes complete with a draw cord backpack for easy portability. The backpack has a plastic lining for hygienic purposes. There is also an outside pocket that can hold wipes or any other necessities. The Potty Seat fits into the draw cord backpack for a complete "on-the-go" solution.

5 year warranty

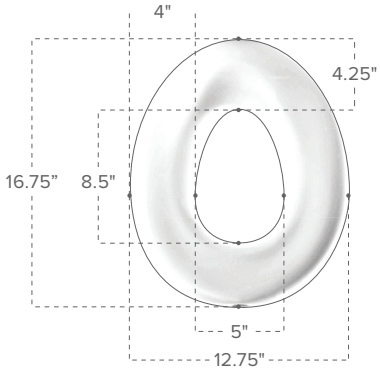

Elongated

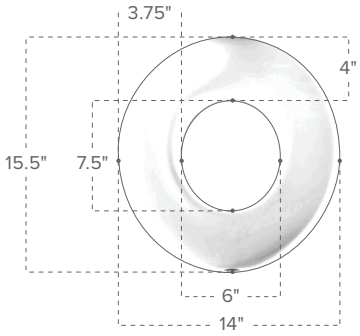

Round

Item	Cherry	Lilac	Lime	Aqua	Dark Gray	Light Gray	MSRP
Round Seat Cushion	____ 74010001	____ 74010002	____ 74010003	____ 74010004	____ 74010009	____ 74010010	$ 270.60
Elongated Seat Cushion	____ 74020001	____ 74020002	____ 74020003	____ 74020004	____ 74020009	____ 74020010	$ 360.80

Draw Cord backpack included.
Fits on most Push Chairs.

Toll-Free Helpline: (866) 529-8407 Fax: (866) 901- 8707
Order Forms Available Online at: www.specialtomato.com/orderforms.html